Form No. 3469-870 Rev A

RT-Pro 61in Mower

Model No. RSRPR261730KT—Serial No. 400000000 and Up

Parts Catalog

Register at www.joinspartannation.com.
Original Instructions (EN)

3469-870 A

Ordering Replacement Parts

To order replacement parts, please supply the part number, the quantity, and the description of each part desired.

Understanding Reference Numbers

Each identified part in an illustration has a reference number. The reference number for a part also appears in the parts list, along with other information about the part.

This catalog uses two special reference number formats, one to indicate parts in a service assembly and another to indicate the quantity of a given part in an illustration.

Service Assembly Reference Numbers

Parts in service assemblies have reference numbers in the form a:b. The a represents the reference number of the entire service assembly and the b represents a sequential number unique to each part within the service assembly.

For example, a wheel assembly might be identified by reference number 6, the tire by 6:1, the valve by 6:2, and the wheel by 6:3. When you order the assembly identified by reference number 6, you receive all parts identified by reference numbers 6:1,6:2, and 6:3. However, you may also order any part individually. Reference numbers of this type appear in illustration and in parts lists.

Reference Numbers Indicating Quantity

In an illustration, if a reference number indicates more than one part, the reference number has the form nX y. The n represents the quantity of the part, the X is the multiplication symbol, and the y represents the reference number.

For example, in an illustration, the reference number 2X 37 means that two of the parts identified by reference number 37 are indicated.

Contents

Main Frame Assembly 4
Frame with Decals Assembly No. 148-0997 6
Transmission Assembly 8
Body Styling Assembly 10
Fuel Tank Assembly 12
Seat Assembly 14
Motion Control and Parking Brake Assembly 16
Caster Tire Assembly 18
Drive Wheel Assembly 20
Electrical Assembly 22
Decklift Assembly 24
Engine Assembly 26
61 Inch Cutting Deck Assembly 28
Deck Decal Assembly No. 148-0787 30
Seat Suspension Assembly 32

© 2025—Spartan®
1525 White Drive
Batesville, AR 72501

Contact us at www.joinspartannation.com.
Printed in the USA.
All Rights Reserved

Main Frame Assembly

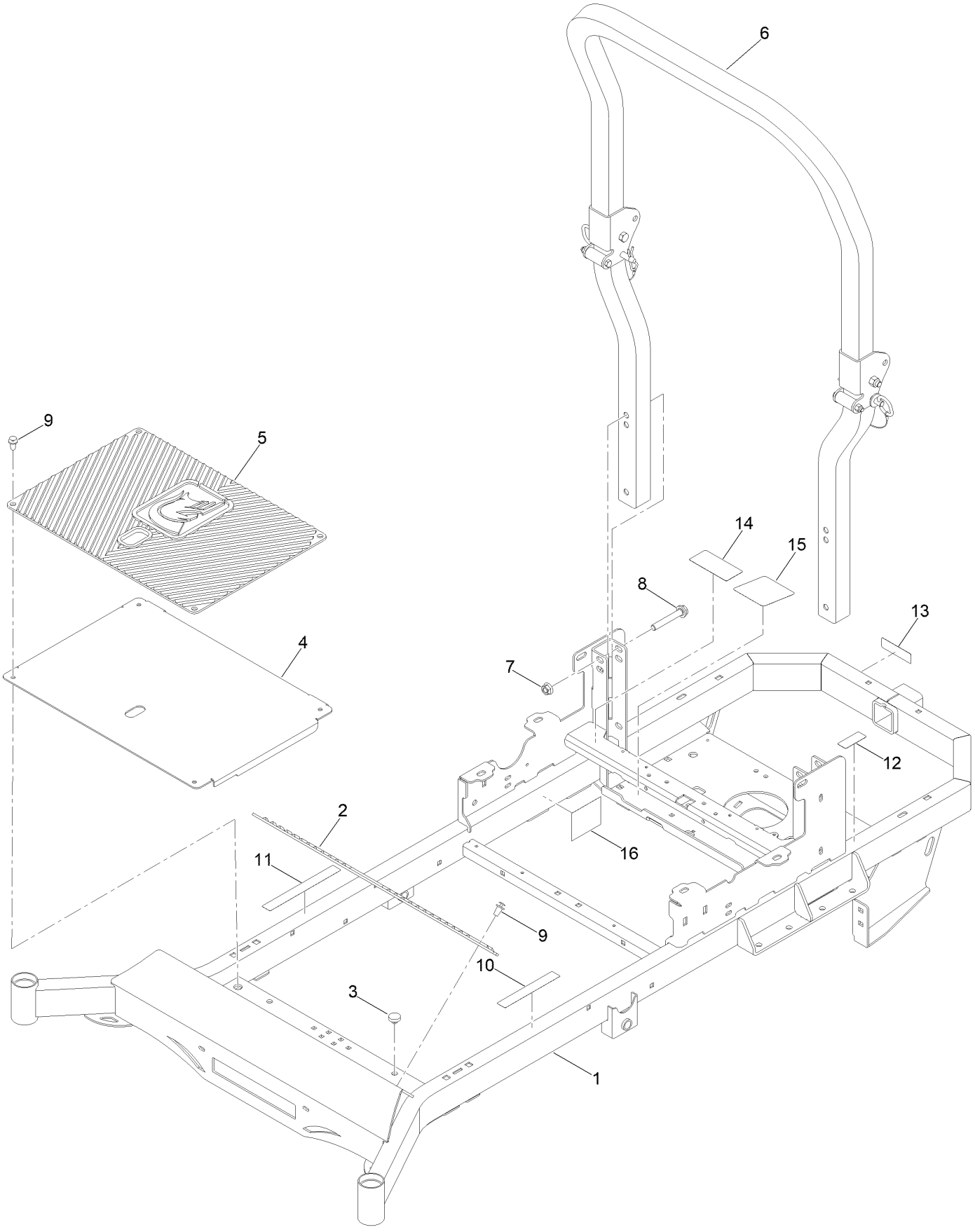

Main Frame Assembly (continued)

Ref.	Part Number	Qty.	Description
1	148-0970-P11	1	Ztr Frame ASM
1	148-0997	1	Frame ASM-Decals
2	481-0005-00	1	Mwr Rubber Foot Rest Mat
3	429-0002-00	2	Push-In Rubber Bumper Mwr Floor
4	439-0007-00-P11	1	Mwr Floorboard Paint
5	481-0006-00	1	Mwr Logo Floor Mat
6	148-0233	1	ROPS
7	413-0014-00	4	1/2-13 Hex Stover Locknut GR C Zinc
8	418-0019-00	4	Bolt-HF
9	414-0002-00	10	8MM Push Type Retainer Nylon Black
10	148-1094	1	Decal-Warning
11	148-1095	1	Decal-Warning
12	127-0392	1	Decal-Hot Surface
13	147-7364	1	Decal-Hitch
14	126-4363	1	Decal-Warning
15	148-0466	1	Decal-Pump Belt Routing-Parker
16	148-1191	1	Decal-Epa

Frame with Decals Assembly No. 148-0997

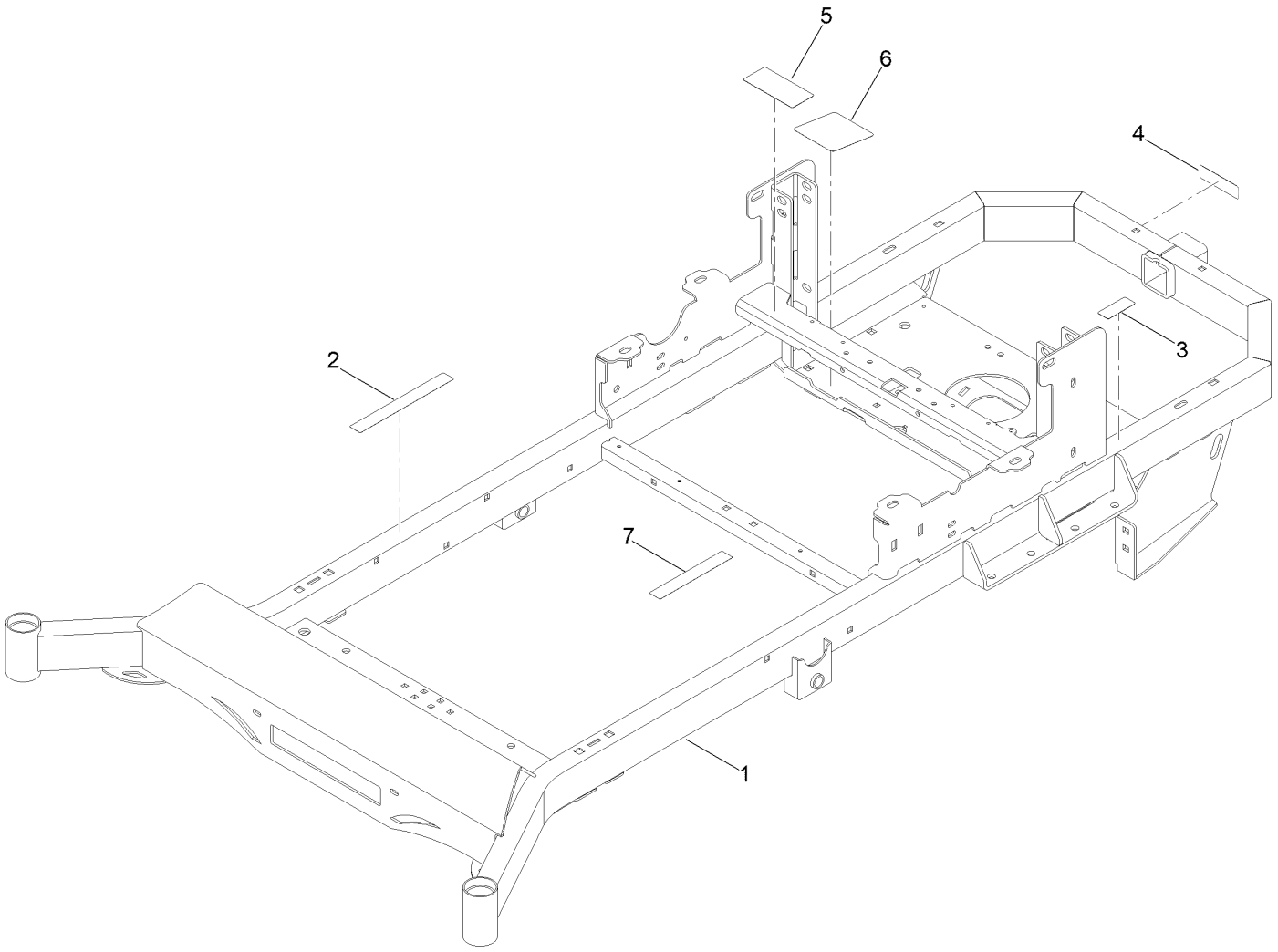

Frame with Decals Assembly No. 148-0997 (continued)

Ref.	Part Number	Qty.	Description
1	148-0970-P11	1	Ztr Frame ASM
2	148-1095	1	Decal-Warning
3	127-0392	1	Decal-Hot Surface
4	147-7364	1	Decal-Hitch
5	126-4363	1	Decal-Warning
6	148-0466	1	Decal-Pump Belt Routing-Parker
7	148-1094	1	Decal-Warning

Transmission Assembly

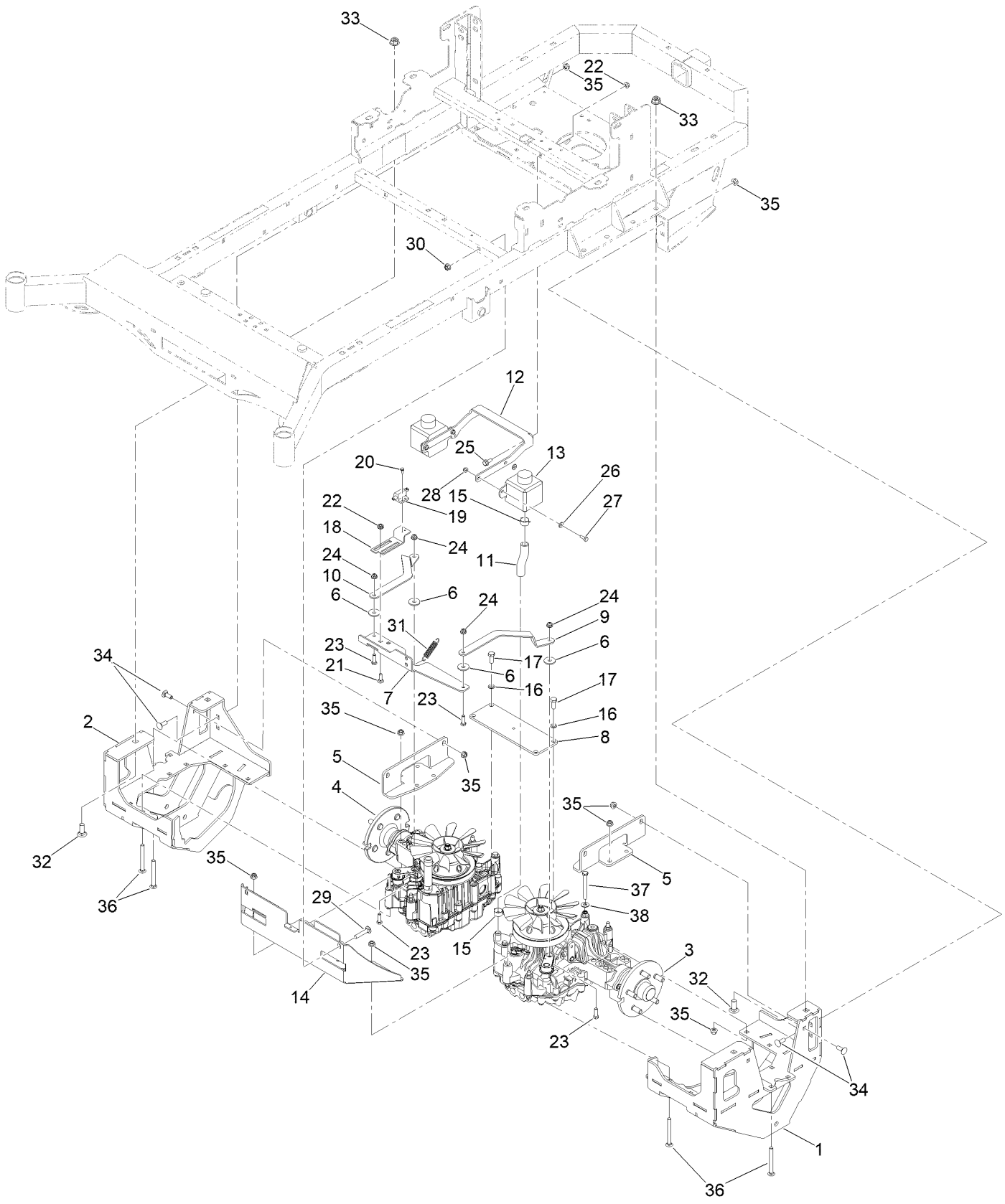

Transmission Assembly (continued)

Ref.	Part Number	Qty.	Description
1	148-1046-P11	1	Hydro Frame ASM, LH
2	148-1142-P11	1	Hydro Frame ASM, RH
3	450-0067-00	1	2023 Tzt-13 Lt Side Hydro Transmission
4	450-0068-00	1	2023 Tzt-13 Rt Side Hydro Transmn
5	148-1132-P11	2	Bracket-Support, Hydro
6	419-0028-00	4	Flt Washer 1.25Odx.38Idx.125 THK Pla
7	439-0829-00-P11	1	Tt13 Brake Rod Bracket
8	426-0243-00-P11	1	Tt13 Transmission Mount Brace
9	426-0244-00-P11	1	Tt13 Brake Rod Plate Left Side
10	426-0242-00-P11	1	Tt13 Brake Rod Plate Right Side
11	451-0001-00	1	Mwr 5/8In Hydraulic Hose, 1Ft
12	148-1157-P11	1	Bracket-Reservoir
13	567-0002-00	2	Rt-Pro Tt13 1/4 Liter Hydr Fluid Resrv
14	439-0830-00-P11	1	Tt13 Battery Box Mount Plate Painted
15	472-0013-00	4	22MM Hose Clamp (Ctb-22ST-Fk)
16	48-9590	4	Washer-Lock
17	618-2100-00	4	M10 X 1.5 X 25MM TAP Bolt
18	439-0827-00-P11	1	Tt13 Brake Interlock Bracket: Painted
19	486-0030-00	1	No Plunger Limit Switch
20	418-0032-00	2	8-32 X 1/2 Ind. HWH Slot Type F Tcs Zinc
21	418-0010-00	2	Bolt-CARR
22	413-0022-00	6	Nut-HF
23	AU426-516	4	Screw-HH
24	413-0027-00	4	Nut-HF, NI
25	116-7230	2	Screw-HHF
26	619-0010-50	4	1/4 Flat Washer Black 18-8 Black Zinc
27	321-4	4	Screw-HH
28	104-7201	4	Nut-HF, NI
29	3231-6	2	Screw-CARR
30	413-0020-00	2	3/8-16 Hex Flange Nut W/Serr Zinc Yellow
31	434-0003-00	1	Mwr Brake Pedal Release Spring
32	148-1262	4	Screw-CARR,Patch
33	413-1005-00	4	1/2-13 Hex Flange 2-Way Rev Cntr L/Nyz
34	418-0045-00	8	3/8-16 X 1 Carriage Bolt Yz GR.8
35	413-0029-00	24	Nut-Hex
36	148-1182	14	Screw-CARR
37	618-2073-00	2	3/8In-16X3-1/4In Hex HD Cap Scr
38	419-0007-00	2	Washer-Flat

Body Styling Assembly

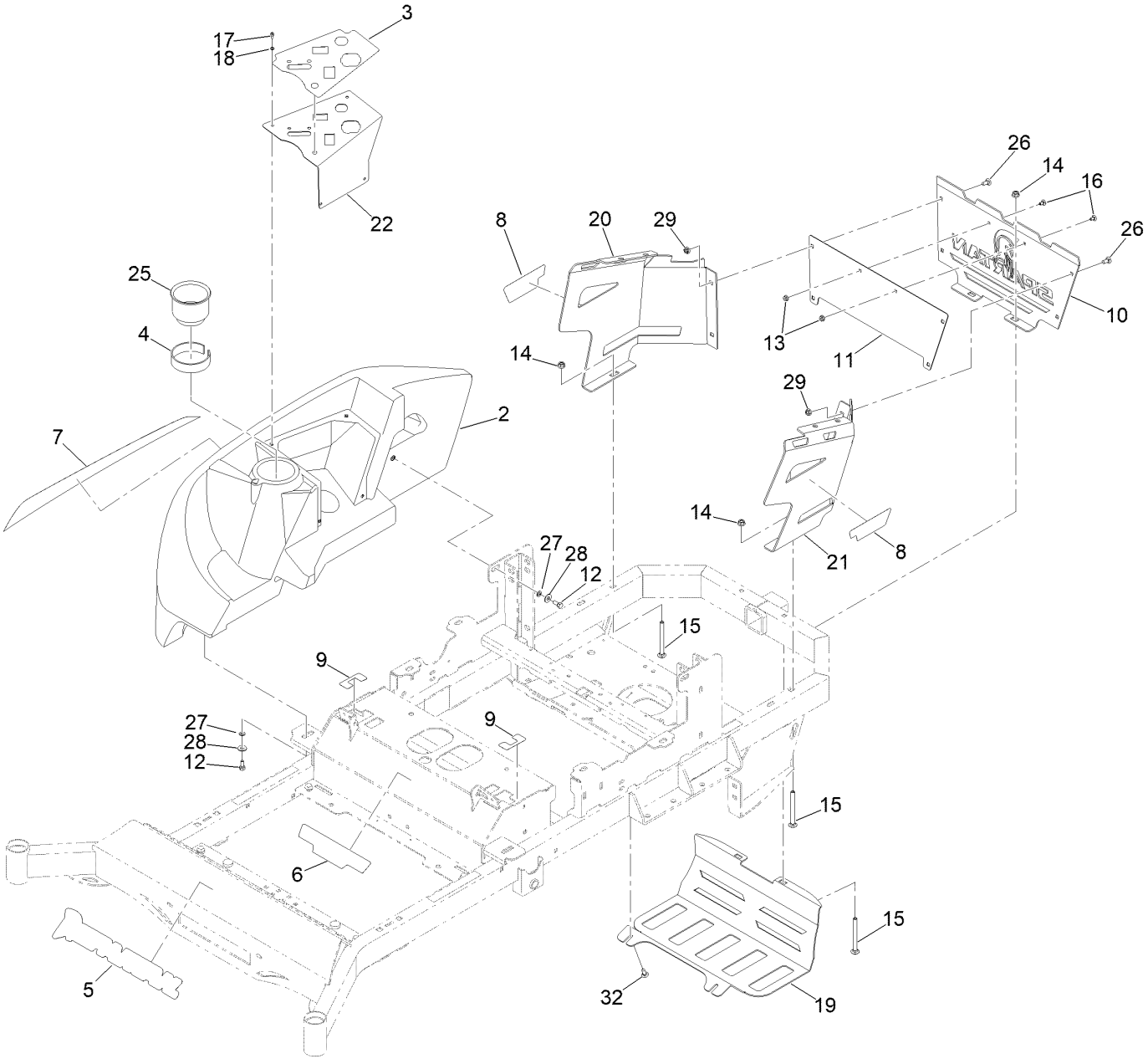

Body Styling Assembly (continued)

Ref.	Part Number	Qty.	Description
2	148-0307	1	Console W/ Cupholder
3	148-1097	1	Decal-Control Panel
4	148-0770	1	Tape-Foam
5	148-0801	1	Decal-Spartan, Front
6	148-0843	1	Decal- Rt-Pro Gt Trac Model
7	148-0845	1	Decal-Tank
8	148-0847	2	Decal-Model
9	148-1056	2	Decal-Motion Control
10	148-1067-P11	1	Plate - Engine Cowling
11	148-1068-P12	1	Plate -Backer Plate
12	418-0054-00	4	Screw-HH
13	413-0023-00	2	1/4-20 Hex Flange Nut W/Serr Zinc
14	413-0029-00	4	Nut-Hex
15	418-0018-00	4	3/8-16 X 4 Carriage Bolt Zinc
16	418-0031-00	2	1/4-20 X 1/2 Carriage Bolt,Yz
17	418-0055-00	4	10-24 X 1/2 Socket C/S 18-8 SS
18	419-0011-00	4	#10 Split Lockwasher 18-8 SS
19	148-1172-P11	1	Muffler Guard [gray]
20	439-0691-00-P11	1	2021 Rt/Srt Engn Cowling Rtpainted
21	439-0692-00-P11	1	2021 Rt/Srt Engn Cowling Lt Painted
22	148-1042-05	1	Rt 45 Key Mnt
25	780-2220-00	1	Cup Holder
26	418-0008-00	4	Bolt-CARR
27	3253-4	4	Washer-Lock
28	419-0007-00	4	Washer-Flat
29	413-0022-00	4	Nut-HF
32	418-0049-00	2	Bolt-HWH

Fuel Tank Assembly

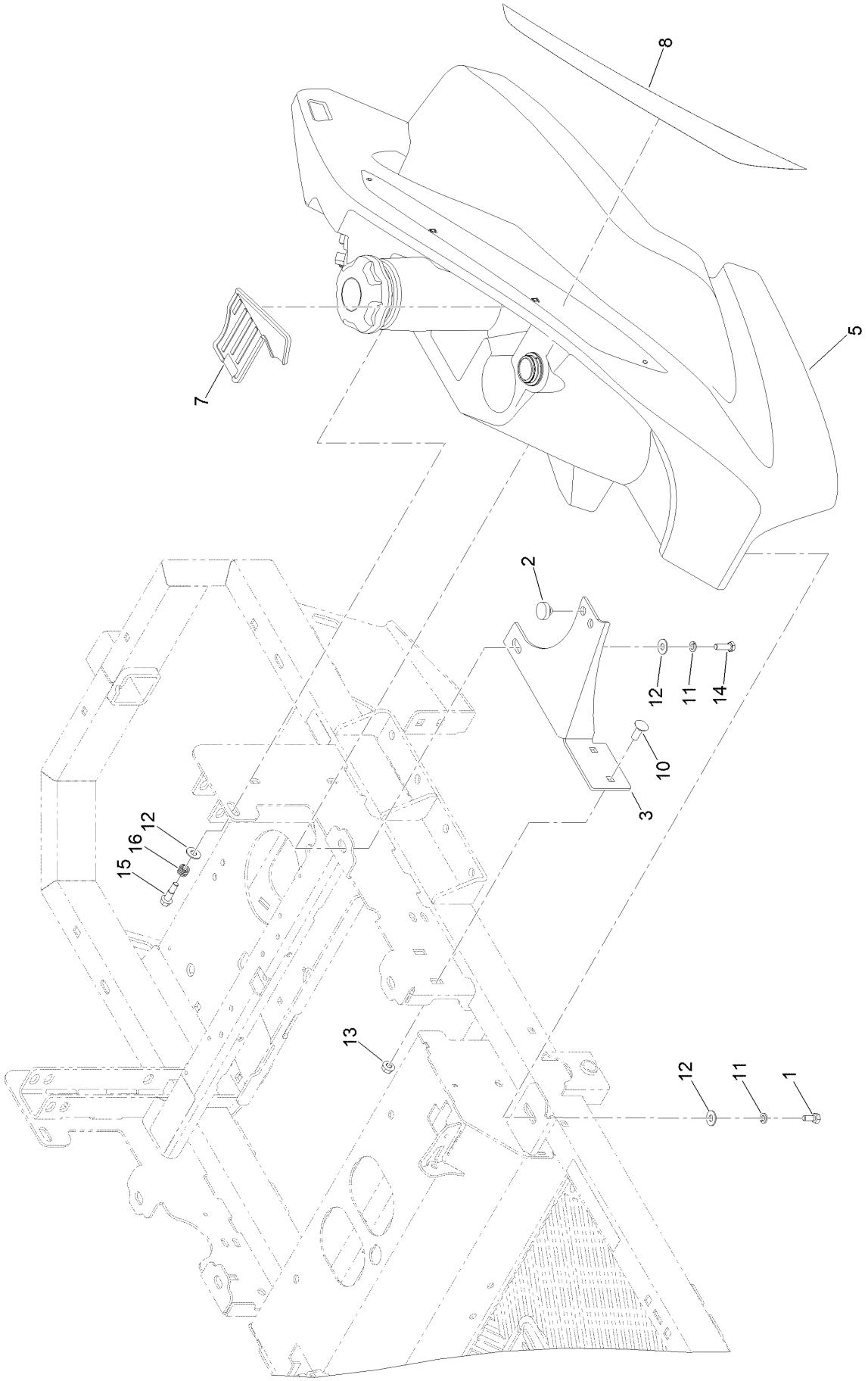

Fuel Tank Assembly (continued)

Ref.	Part Number	Qty.	Description
1	418-0054-00	2	Screw-HH
2	429-0002-00	2	Push-In Rubber Bumper Mwr Floor
3	148-0478-P11	1	Bracket-Tank Support
5	467-0001-00	1	Mwr Gasoline Fuel Tank Assy
7	481-0004-00	1	Rubber Tank Storage Compartment Insert
8	148-0844	1	Decal-Tank
10	418-0045-00	2	3/8-16 X 1 Carriage Bolt Yz GR.8
11	3253-4	3	Washer-Lock
12	419-0007-00	4	Washer-Flat
13	413-0020-00	2	3/8-16 Hex Flange Nut W/Serr Zinc Yellow
14	418-0108-00	1	Screw-HH
15	418-0287-00	1	Screw-Shoulder,HHF
16	434-0020-00	1	Spring-Compression

Seat Assembly

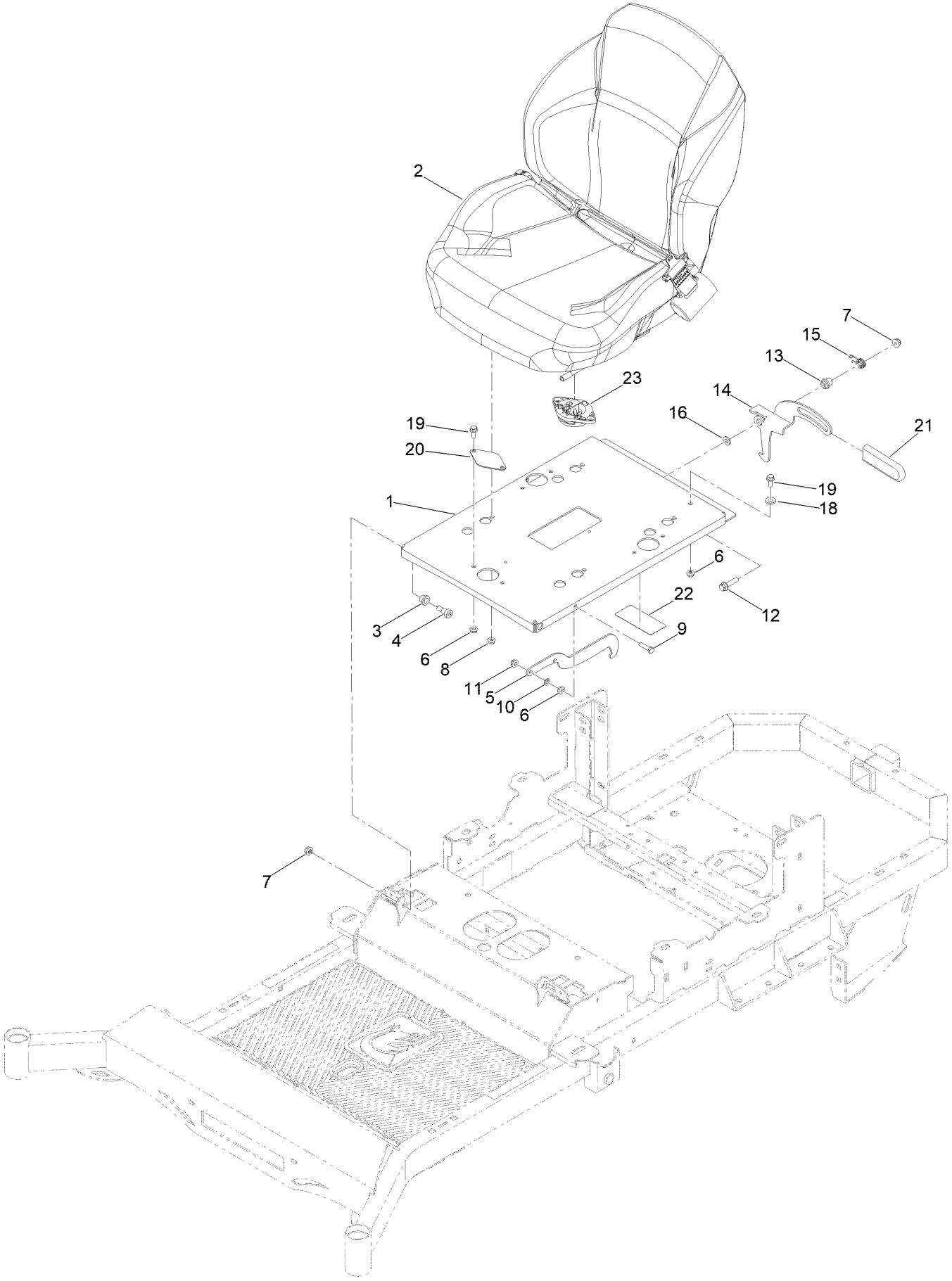

Seat Assembly (continued)

Ref.	Part Number	Qty.	Description
1	148-1047	1	Non 360 Seat Base Plate
			Safty Decal ASM-
2	471-0035-00	1	Rt Pro Seat
3	410-0010-00	2	1/2In ID X 5/8In OD X 1/2In
			Flange Bush
4	418-0038-00	2	1/2 X 1/2 Socket Shoulder
			Bolt Zc Yellow
5	439-0065-00-P11	1	Mwr Seat Latch Hook Paint
6	413-0022-00	4	Nut-HF
7	413-0029-00	3	Nut-Hex
8	413-0019-00	4	5/16-18 Nylon Insert Flange
			L/Nut Zc
9	322-47	1	Screw-HH
10	413-0016-00	1	.312Idx.625Odx.062 THK
			Thrust Brg Oi Brz
11	413-0027-00	1	Nut-HF, NI
12	114-4681	1	Screw-HHF
13	107-0075	1	Bushing-Latch, Seat
14	148-0953	1	Bracket-Latch
15	126-8923	1	Spring-Torsion, Latch
16	3256-24	1	Washer-Plain
18	419-0006-00	1	.312 ID X .875OD X .1875
			THK F/W NYL
19	116-7230	3	Screw-HHF
20	426-0241-00-P11	1	2020 Rt/Srt Univ Float Seat
			Cvr PLT
21	484-0002-00	1	Stand Up Mwr Brake Arm
			Grip
22	125-8473	1	Decal-Warning, Battery
23	486-0036-00	1	Mwr Seat Switch

Motion Control and Parking Brake Assembly

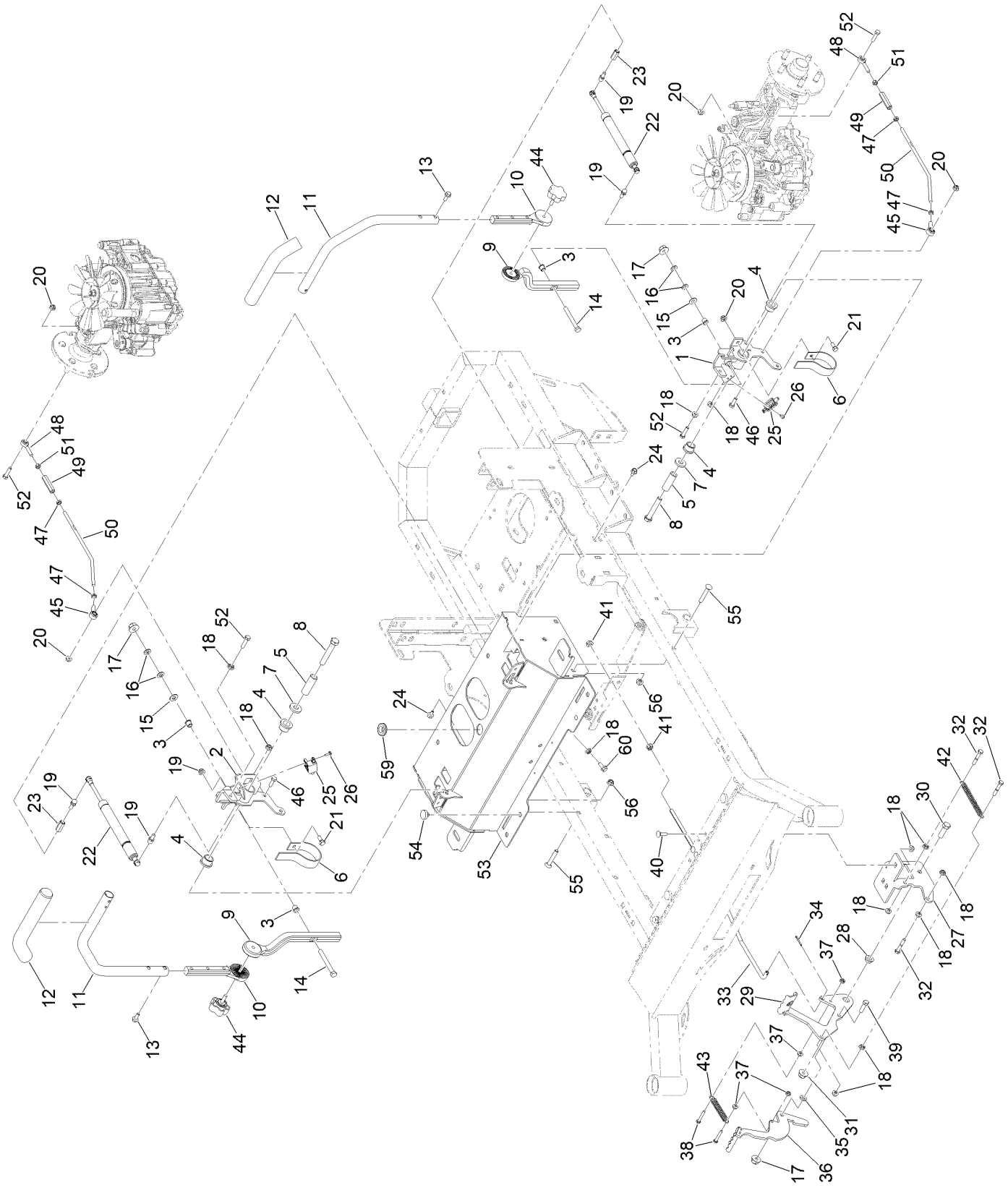

Motion Control and Parking Brake Assembly (continued)

Ref.	Part Number	Qty.	Description
1	148-0888-05	1	LH Pivot ASM
2	148-0889-05	1	RH Pivot ASM
3	148-0886	4	Bushing-Flange
4	148-0897	4	Bushing-Flange
5	148-0885	2	Sleeve-Pivot
6	109-5575	2	Spring-Leaf
7	419-0003-00	2	1/2 Fender Washer 1-1/4In OD Zinc
8	418-0050-00	2	1/2-13 X 3 Hex C/S GR 5 Zinc W/Loctite
9	431-0002-00	2	Adjustable Lwr Drive Arm
10	431-0003-00	2	Adjustable Upp Drive Arm
11	403-0020-10-P11	2	Mower Drive Handle Tube Abc
12	484-0001-00	2	Control Arm Handle Grip
13	116-7230	4	Screw-HHF
14	323-20	2	Screw-HH
15	419-0007-00	2	Washer-Flat
16	148-1012	4	Washer-Belleville
17	413-0013-00	3	3/8-16 Nylon Insert Flange L/Nut Yz
18	413-0022-00	15	Nut-HF
19	487-0005-00	4	5/16-18X1.286 Damper Ball Stud (.562 Tl)
20	413-0027-00	6	Nut-HF, NI
21	418-0054-00	2	Screw-HH
22	487-0001-00	2	Control Arm Damper
23	613-0065-00	2	Standoff-Hex
24	3234-28	2	Screw-HHF
25	486-0030-00	2	No Plunger Limit Switch
26	418-0032-00	4	8-32 X 1/2 Ind. HWH Slot Type F Tcs Zinc
27	439-0009-00-P11	1	Mwr Frame Brake Mtg Brkt Paint
28	410-0009-00	1	1/2In ID X 3/4In OD X 3/8In Flange Bush
29	490-0016-00-P11	1	Mwr Brake Lock Lever Assy Painted
30	139-2631	1	Screw-HH
31	413-0002-00	1	Nut-Lock
32	418-0027-00	3	Bolt-HH
33	435-0032-60	1	Ttq 1310 Brake Rod
34	3272-11	1	Pin-Cotter
35	413-0052-00	1	3/8 ID X 3/4 OD X .125 THK Bronze Washer
36	490-0017-00-P11	1	Mwr Brake Unlock Lever Assy Painted
37	413-0012-00	4	1/4-20 Hex Flange Nut
38	418-0029-00	2	1/4-20 X 1-1/4 Hex C/S GR 2 Zinc
39	323-7	1	Screw-HH
40	418-0010-00	3	Bolt-CARR
41	413-0020-00	2	3/8-16 Hex Flange Nut W/Serr Zinc Yellow
42	434-0015-00	1	2020 Mwr Brake Pedal Tension Spring
43	434-0003-00	1	Mwr Brake Pedal Release Spring
44	148-0228	2	5/16-18 X 1 Sl 5-Lobe Male ST Knob 1.90
45	410-0070-00	2	5/16-24 Spher Rod End Zinc LH Thd Fem
46	AU426-516	2	Screw-HH
47	3220-20	4	Nut-Jam
48	148-1099	2	Rod End-Ball Joint
49	148-1100	2	Nut-Sleeve
50	148-1079	2	Rod-Drive Arm
51	09207	2	Nut
52	322-47	4	Screw-HH
53	148-0911-P11	1	ASM, Gt-Trac [gray]
54	429-0002-00	2	Push-In Rubber Bumper Mwr Floor
55	618-2023-00	4	Screw-CARR
56	413-0029-00	4	Nut-Hex
59	240-6	1	Grommet-Rubber
60	418-0048-00	2	5/16-18 X 3/4 Hex Flange Bolt GR 8 Yz

Caster Tire Assembly

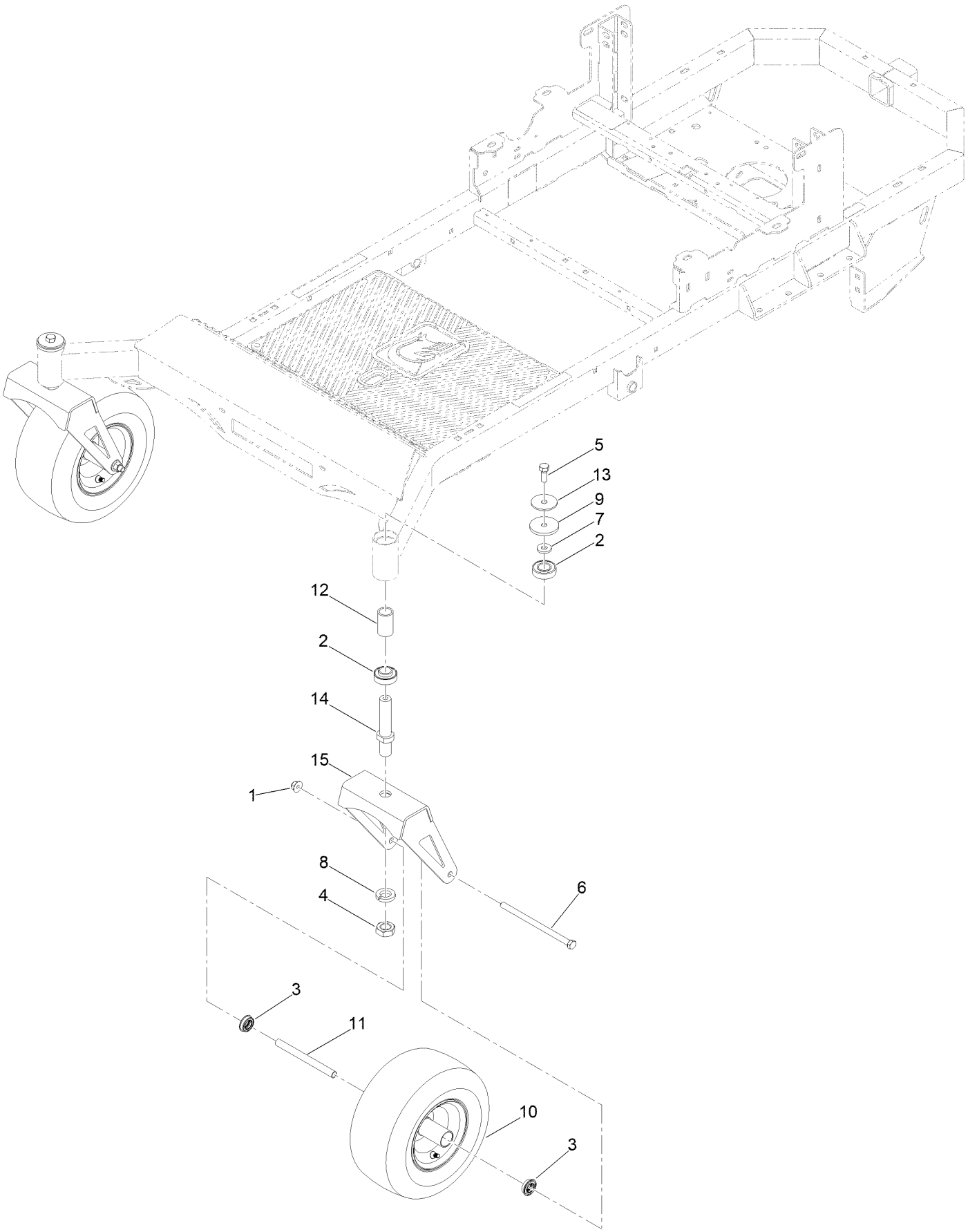

Caster Tire Assembly (continued)

Ref.	Part Number	Qty.	Description
1	413-0002-00	2	Nut-Lock
2	103-3540	4	Bearing-Ball
3	410-0018-00	4	Rz Ft Wheel Bearing
4	413-0063-00	2	Nut-Hex
5	418-0002-00	2	1/2-20 X 1-1/4 Hex Flange Bolt GR 8 Yz
6	325-24	2	Screw-HH
7	419-0003-00	2	1/2 Fender Washer 1-1/4In OD Zinc
8	419-0024-00	2	1In L/W Med Split Zc
9	419-0025-00	2	Ft Hub Plastic Washer
10	422-0027-00	2	Rz/Rt Pro Ft Tire Assy-Smooth Tread
11	425-0010-00	2	Mwr Ft Wheel Spanner
12	425-0011-00	2	Caster Fork Shaft Bearing Spacer
13	426-0006-00-P11	2	Mwr Caster Shaft Washer
14	437-0019-00	2	Mwr Caster Shaft
15	490-0046-00-P11	2	Rz Caster Fork ASM

Drive Wheel Assembly

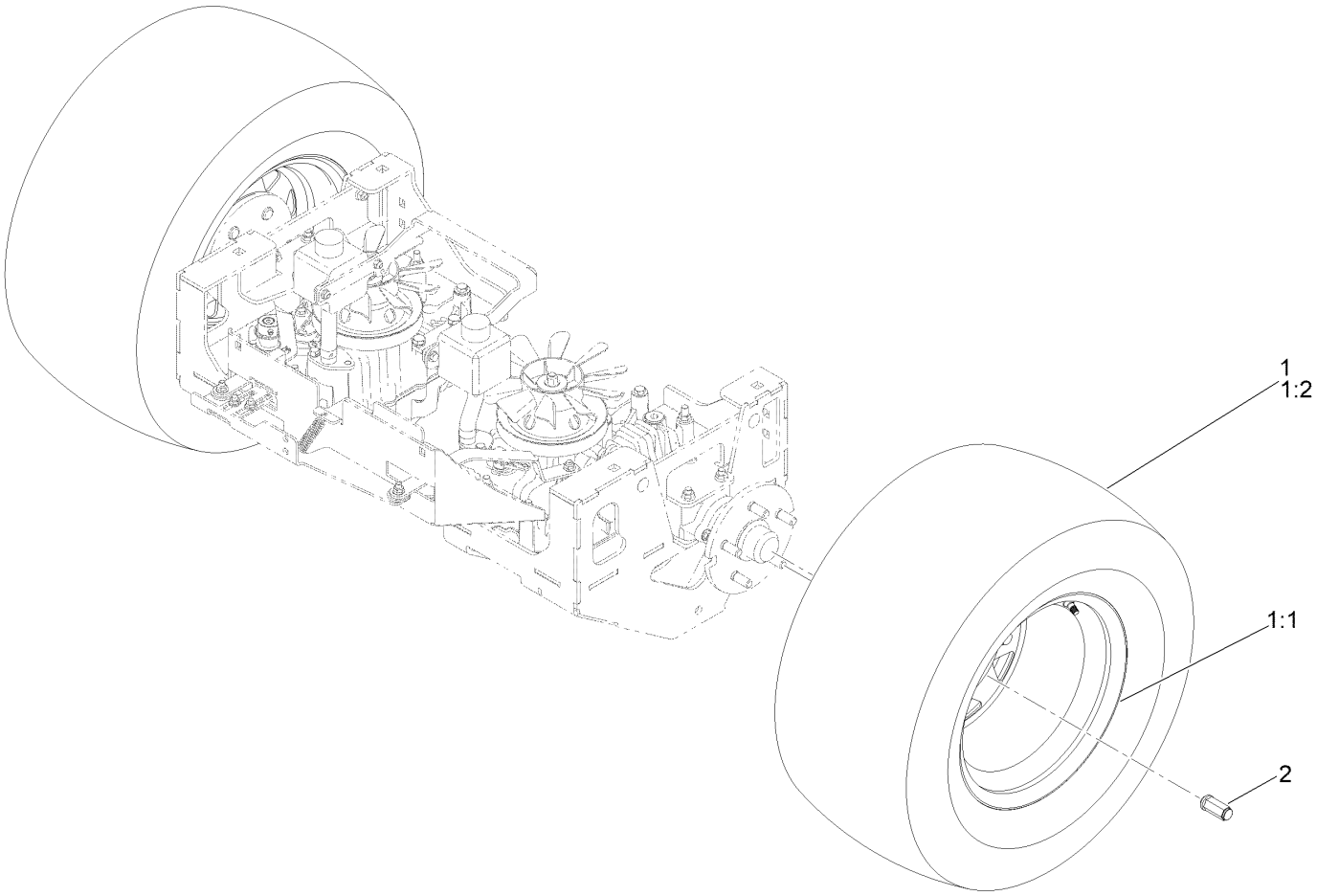

Drive Wheel Assembly (continued)

Ref.	Part Number	Qty.	Description
1	422-0058-00	2	Turf Armor 24X12-12 Rr Tire/Wheel Assy
1:1	148-0777	1	Rim
1:2	148-0776	1	Tire
2	613-0001-00	10	Lug Nuts

Electrical Assembly

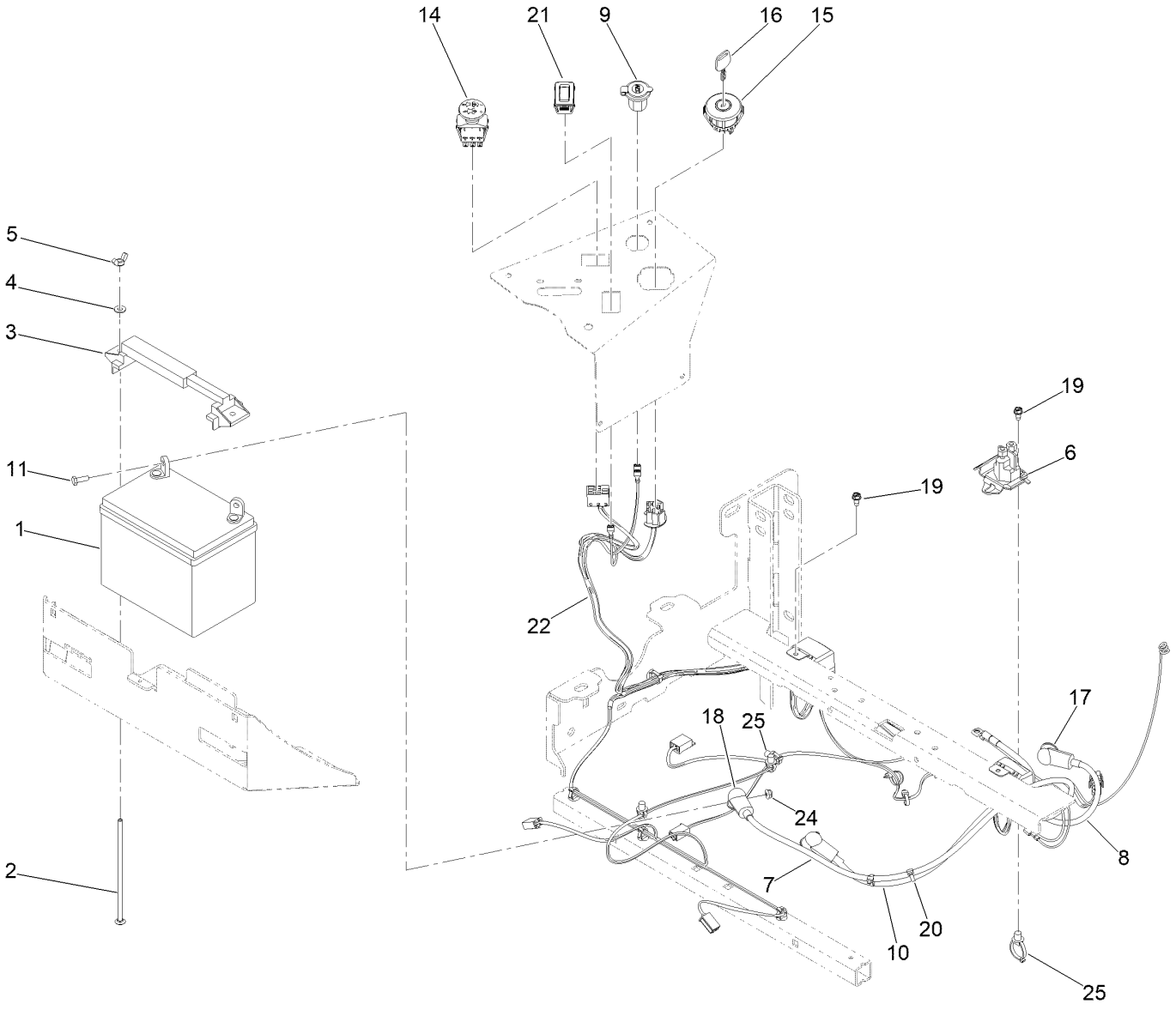

Electrical Assembly (continued)

Ref.	Part Number	Qty.	Description
1	468-1004-00	1	12 Volt Start Battery 300CCA
2	418-0034-00	2	1/4-20 X 7 Carriage Bolt Zinc
3	443-0001-00	1	Battery Hold Down
4	515-0038	2	Washer-Flat
5	1-803038	2	Wingnut
6	486-0006-00	1	Heavy Duty Start Solenoid
7	486-0017-00	1	Mwr Negative Cable 28
8	486-0018-00	1	Mwr Start Wire 12
9	677-2075-00	1	12 Volt Auxilliary Plug
10	486-0016-00	1	Mwr Positive Battery Cable 25In
11	321-4	2	Screw-HH
14	486-0060-00	1	PTO Switch
15	486-0062-00	1	Ignition Switch
16	486-0065-00	1	2023 Mwr Key
17	436-0002-00	1	3.15 Lgth Straight Insul Term Cover Red
18	436-0003-00	1	Straight Insulating Terminal Cover
19	120-9551	4	Screw-HWH
20	3290-379	6	Tie-Cable
21	148-1063	1	Hour Meter
22	148-1026	1	Harness-Wire
24	104-7201	2	Nut-HF, NI
25	32180-030	2	Clip-Tie

Decklift Assembly

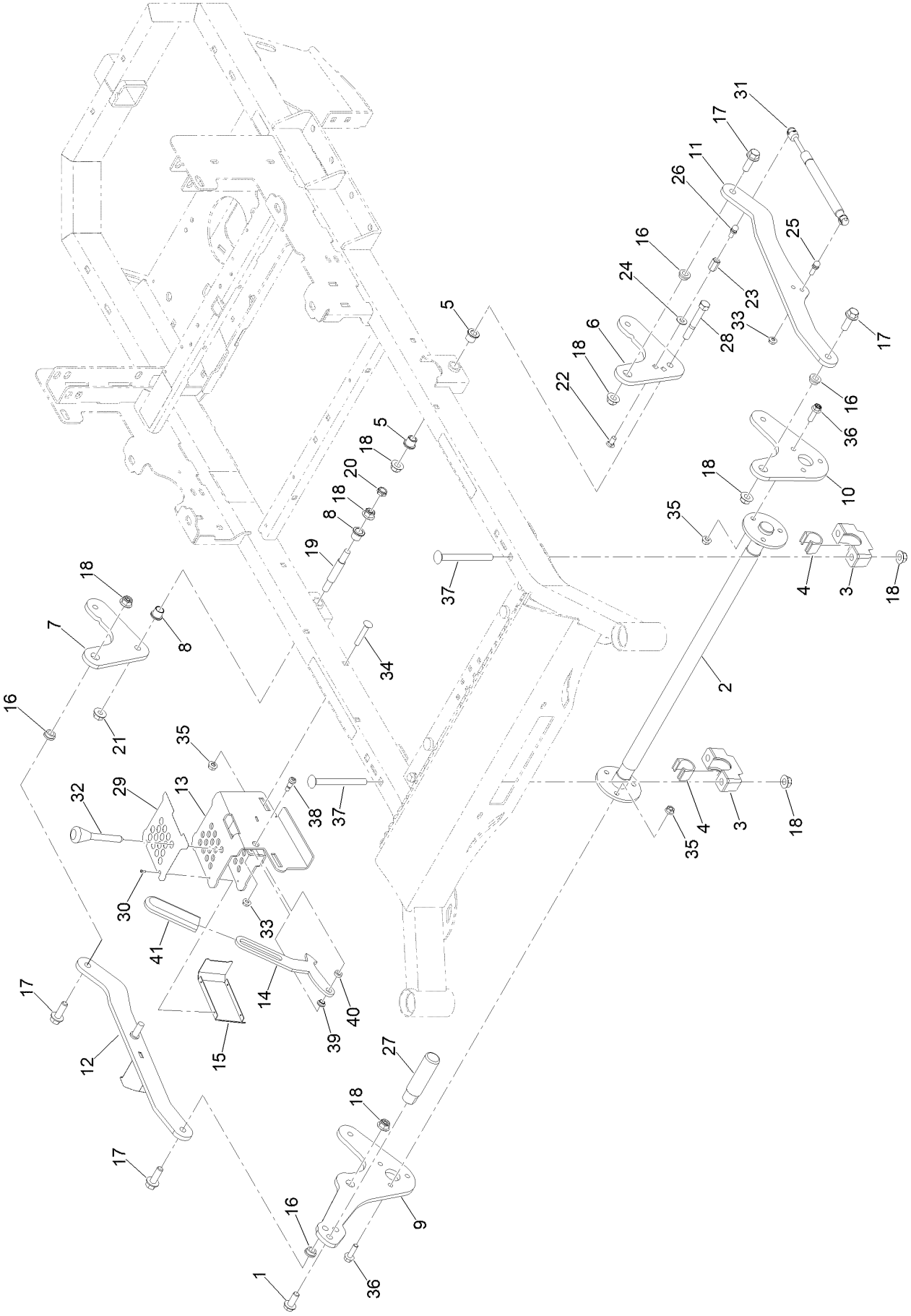

Decklift Assembly (continued)

Ref.	Part Number	Qty.	Description
1	148-0095	1	1/2-13X1.25In Hex Flange Bolt (GR.8) Yz
2	148-1074	1	Decklift ASM-Front
3	148-1085	2	Support-Bearing Housing
4	109-9410	2	Bearing-Cross Shaft, Front
5	135-5694	2	Bushing-Flange
6	148-1003-P11	1	(Rz Rear HOC Hanger)
7	148-0418-P11	1	Arm-Decklift Rear (3/8")
8	135-9063	2	Bushing-Flange
9	148-0950-P11	1	Lever-Lift
10	148-1075-P11	1	Plate-Decklift, Arm LH [gray]
11	148-0940-P11	1	Link-HOC(Left Side)
12	148-0941-P11	1	Link ASM-HOC(Right Side Welded)
13	148-0946-P11	1	Bracket-HOC ASM [gray]
14	148-0943	1	Plate-Transport Lock
15	148-0949-P11	1	Cover-HOC
16	410-0009-00	4	1/2In ID X 3/4In OD X 3/8In Flange Bush
17	100-6116	4	Screw-HHF
18	413-1005-00	10	1/2-13 Hex Flange 2-Way Rev Cntr L/Nyz
19	418-0276-00	1	Rr Deck Height Bolt (Machined)
20	3296-45	1	Nut-Hex
21	32128-49	1	Nut-HHF
22	618-2068-00	1	3/8 X 3/4In GR 8 CARR Bolt Zinc
23	148-0422	1	Hex Coupling Nut - Reducer (3/8" To 5/16
24	419-0007-00	1	Washer-Flat
25	487-0008-00	1	5/16-18X1.286 Damper Ball Stud (.562 Tl)
26	487-0005-00	1	5/16-18X1.286 Damper Ball Stud (.562 Tl)
27	148-0951	1	Pedal
28	418-0042-00	1	1/2-13 X 3-1/2 Hex C/S GR 5 Zinc Yellow
29	148-1036	1	Decal-Height Of Cut
30	923786	4	Rivet
31	434-0001-00	1	Deck Assist Gas Spring
32	420-0009-00	1	Magnetic Pin For Stand On Mwr
33	413-0022-00	2	Nut-HF
34	618-2023-00	2	Screw-CARR
35	413-0029-00	8	Nut-Hex
36	148-1087	6	Screw-HHF
37	148-1080	4	Screw-CARR
38	418-0083-00	1	3/8 X 1/2 Socket Shoulder Bolt Yz
39	148-1211	1	Bushing-Flange
40	148-1212	1	Washer-Plain
41	484-0002-00	1	Stand Up Mwr Brake Arm Grip

Engine Assembly

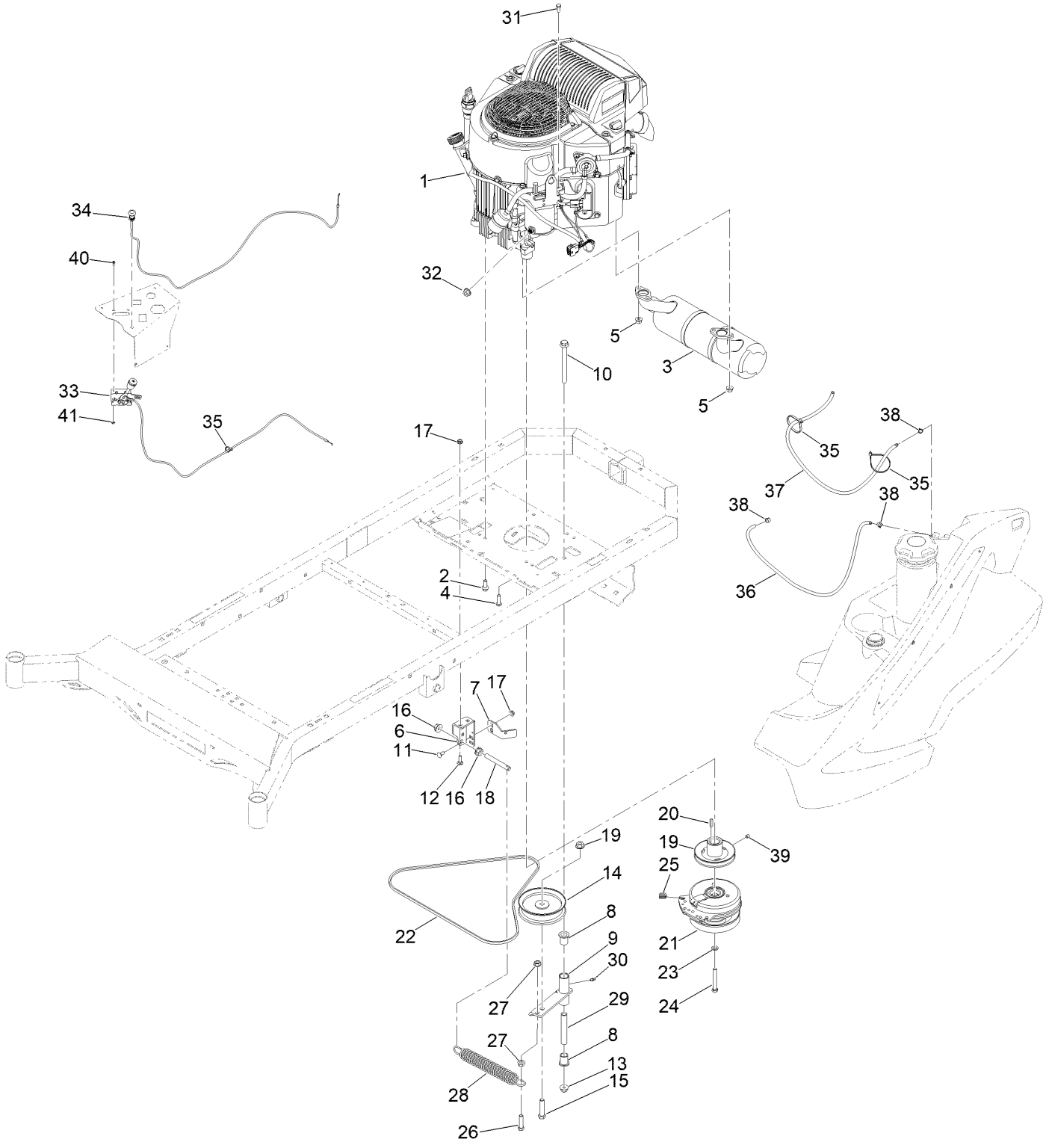

Engine Assembly (continued)

Ref.	Part Number	Qty.	Description
1	415-0024-00	1	Kawasaki Ft730-Carb Engine
2	418-0023-00	3	3/8-16 X 1-1/8 Ind HWH W/Serr Tri Lob Zy
3	415-0074-00	1	2019 Exhaust Syst For Kawi Fr Fs And Ft
4	418-0224-00	1	3/8-16 X 1-1/4 Pan Torx (Tri-Lob) Trs Zc
5	104-2612	4	Nut-HF
6	439-0244-00-05	1	Mwr Pump Idler Tensioning Brkt Black
7	439-0910-00-05	1	Ttq 1310 Mower Clutch Bracket
8	410-0007-00	2	3/4In ID X15/16In OD X 1-1/8In Flng Bush
9	490-0018-00-05	1	Mwr Pump Idler Assy Black
10	418-0009-00	1	1/2-13 X 5-1/2 Hex Flange Bolt GR 8 Zy
11	418-0008-00	2	Bolt-CARR
12	418-0062-00	2	5/16-18 X 1-1/4 Carriage Bolt Zc/Yel
13	413-0002-00	1	Nut-Lock
14	433-0013-00	1	5-3/4In Idler Pulley 7/16In Spacer Assy
15	325-9	1	Screw-HH
16	32128-49	3	Nut-HHF
17	413-0022-00	4	Nut-HF
18	430-0001-00	1	Mwr Pump Idler Spring Tensioner
19	433-0002-00	1	Mwr Hydraulic Pump Drive Pulley (B-Belt)
20	1-807259	1	Key
21	470-0002-00	1	Warner PTO Clutch
22	461-0022-00	1	Ttq Rt Pump B-Belt (61.25")
23	3253-6	1	Washer-Lock
24	418-0022-00	1	7/16-20 X 3 Hex C/S GR 8 Zc Yellow
25	437-0025-00	1	Mwr Clutch Rotation Stop Brkt Sleeve
26	324-7	1	Screw-HH
27	32128-37	2	Nut-HF
28	434-0007-00	1	Mwr Deck Spring
29	425-0006-00	1	Mwr Inner Idler Spacer
30	424-0002-00	1	1/4In Drive Type Grease Fitting Yz
31	418-0278-00	1	M8-1.25 X 20MM Hex Flange Bolt Zinc 10.9
32	413-0012-00	1	1/4-20 Hex Flange Nut
33	464-0001-00	1	Mwr Throttle Cable Assy W / Handle
34	464-0002-00	1	Mwr Choke Cable Assm
35	3290-379	3	Tie-Cable
36	751-1014-00	10	1/4In SAE J30R7 Bulk Hose 1Ft
37	451-0002-00	10	Mwr Fuel Tank Black 3/16In Vent Tube 1Ft
38	472-0004-00	3	1/2In (#8) Hose Clamp
39	418-0280-00	1	5/16-18 X 3/8 Socket Set Screw
40	418-0055-00	2	10-24 X 1/2 Socket C/S 18-8 SS
41	110-3145	2	Nut-Lock

61 Inch Cutting Deck Assembly

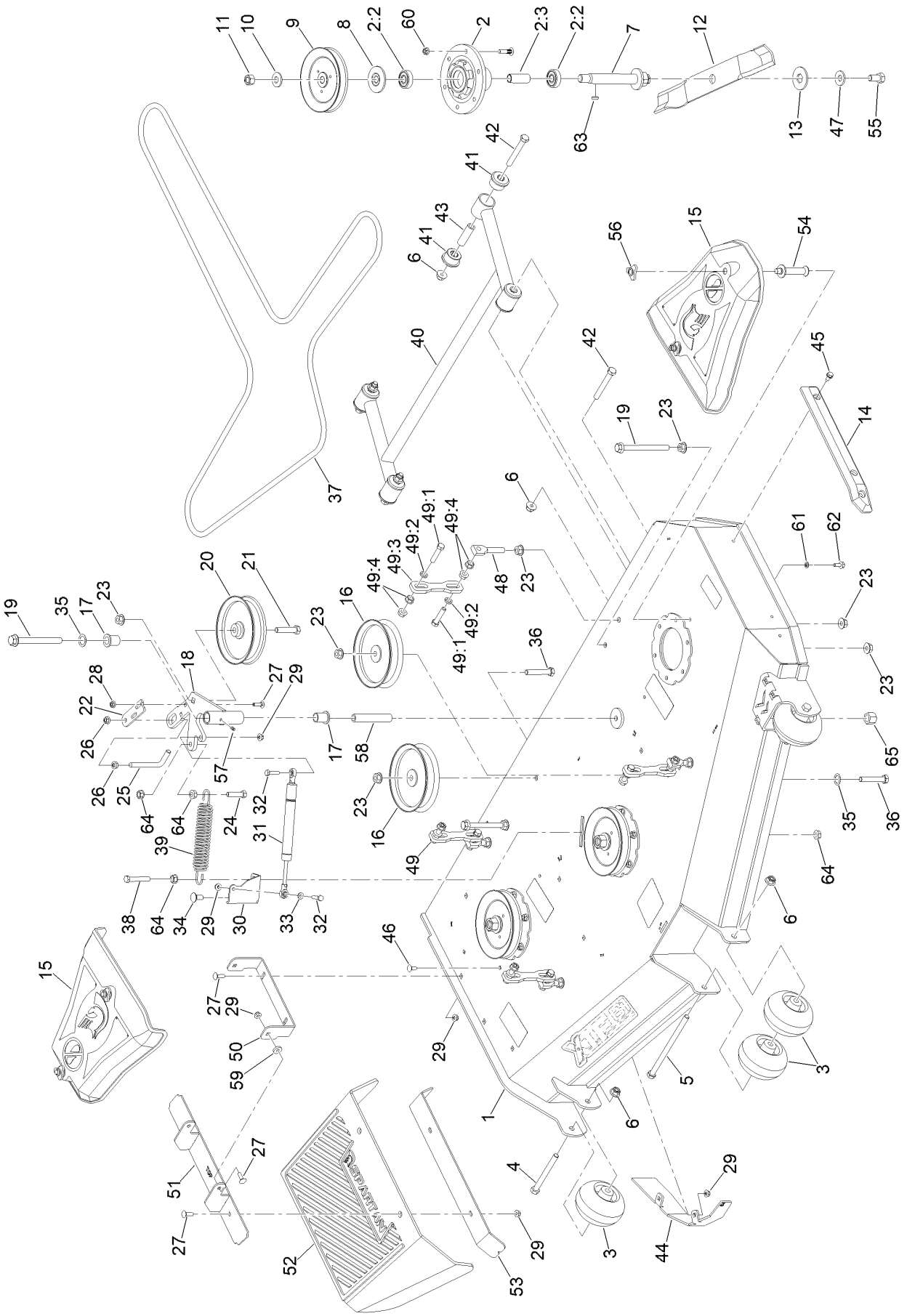

61 Inch Cutting Deck Assembly (continued)

Ref.	Part Number	Qty.	Description
1	148-0787	1	ASM-Deck W/Decals
2	148-0005	3	Spindle ASM 6" Deck
2:2	116-0720	2	Bearing-Ball
2:3	148-0026	1	Spacer, Bearing
3	422-0061-00	4	Mwr Anti-Scalp Whl W/O Grease Fitting
4	418-0016-00	2	Screw-HH
5	418-0015-00	1	1/2-13 X 8-1/2 Hex C/S GR 2 Zinc Yellow
6	413-0002-00	7	Nut-Lock
7	148-0106	3	Shaft - Spindle
8	116-1286	3	Guard,Bearing Top .989
9	148-0030	3	Pulley
10	148-0113	3	M20 Spring Washer (44.5Mmod/ 3.3MM THK)
11	148-0111	3	M20X1.5 C8.8 Hex Nut
12	148-0099	3	Blade-Rotary
13	148-0108	3	Washer-Hex
14	429-0001-00	1	Mwr Nylon Deck Guard
15	148-0093	2	Cover-Belt
16	433-0015-00	2	6-3/4In Idler Pulley 15/16In Spacer Assy
17	410-0007-00	2	3/4In ID X15/16In OD X 1-1/8In Flng Bush
18	490-0019-00-P11	1	Mwr Deck Idler Pulley Arm Assy Paint
19	418-0009-00	3	1/2-13 X 5-1/2 Hex Flange Bolt GR 8 Zy
20	433-0014-00	1	6-3/4In Idler Pulley 7/16In Spacer ASM
21	325-9	1	Screw-HH
22	439-0257-00-P11	1	Deck Idler Pulley Belt Retnr Brkt Paint
23	32128-49	15	Nut-HHF
24	324-7	1	Screw-HH
25	148-1137	1	Bolt-L
26	413-0020-00	2	3/8-16 Hex Flange Nut W/Serr Zinc Yellow
27	418-0060-00	8	5/16-18 X 1 Carriage Bolt GR 8 Yz
28	413-0022-00	2	Nut-HF
29	413-0027-00	10	Nut-HF, NI
30	439-0335-00-P11	1	Deck Belt Idler Damper Mtg Brkt Painted
31	434-0009-00	1	Idler Gas Spring
32	322-47	2	Screw-HH
33	413-0016-00	1	.312Idx.625Odx.062 THK Thrust Brg Oi Brz
34	3232-1	1	Screw-CARR
35	418-0110-00	1	.767Idx1.125Odx.016 THK Trip Wv Washer
36	418-0246-00	2	1/2-13 X 2-3/4 Hex Flange Bolt (GR.8) Yz
37	461-0002-00	1	61 Deck Belt
38	418-0013-00	1	Bolt-HH
39	434-0007-00	1	Mwr Deck Spring
40	490-0014-00-P11	1	54In/61In Deck Frame Stabilizer Painted
41	732-2000-00	8	Red A80 Susp Bushing
42	418-0021-00	4	1/2-13 X 3-3/4 Hex C/S (GR.5) Zc/Yel
43	732-2001-00	4	UTV A-Arm Bushing Sleeve
44	148-0208-P11	1	Baffle-Wiper
45	9264964	3	Screw-HWH, Thread Cut
46	418-0008-00	2	Bolt-CARR
47	148-0114	3	M16 Spring Washer (39Mmod/ 3.9MM THK)
48	448-0001-00	4	Mwr Deck Height Adjustment Stud
49	435-0007-KT	4	Mwr Deck Susp Link Assy
49:1	435-0007-00-P11	1	Mwr Deck Susp Link Paint
49:2	324-8	2	Screw-HH
49:3	419-0010-00	2	.443 ID X .749 OD X .125 THK Nylon Black
49:4	32128-37	4	Nut-HF
50	439-0111-00-P11	1	Mwr Chute Mtg Brkt Painted
51	490-0056-00-P11	1	Rt/Srt Deck Chute Hinge Assy Paint
52	481-0011-00	1	2020 Rt/Srt Rubber Discharge Chute
53	439-0190-00-P11	1	2020 Deck Chute Hinge Backer Brkt Paint
54	148-0094	4	Pin-Belt Cover
55	148-0109	3	M16X1.5-30MM C10.9 Hex Bolt
56	148-0234	4	Nut-Knob
57	424-0002-00	1	1/4In Drive Type Grease Fitting Yz
58	425-0006-00	1	Mwr Inner Idler Spacer
59	419-0006-00	2	.312 ID X .875OD X .1875 THK F/W NYL
60	413-0029-00	18	Nut-Hex
61	3253-4	4	Washer-Lock
62	116-7230	4	Screw-HHF
63	148-0118	3	6MM X 6MM X 20MM Rounded Machine Key
64	32128-37	5	Nut-HF
65	3296-23	1	Nut-Lock, NI

Deck Decal Assembly No. 148-0787

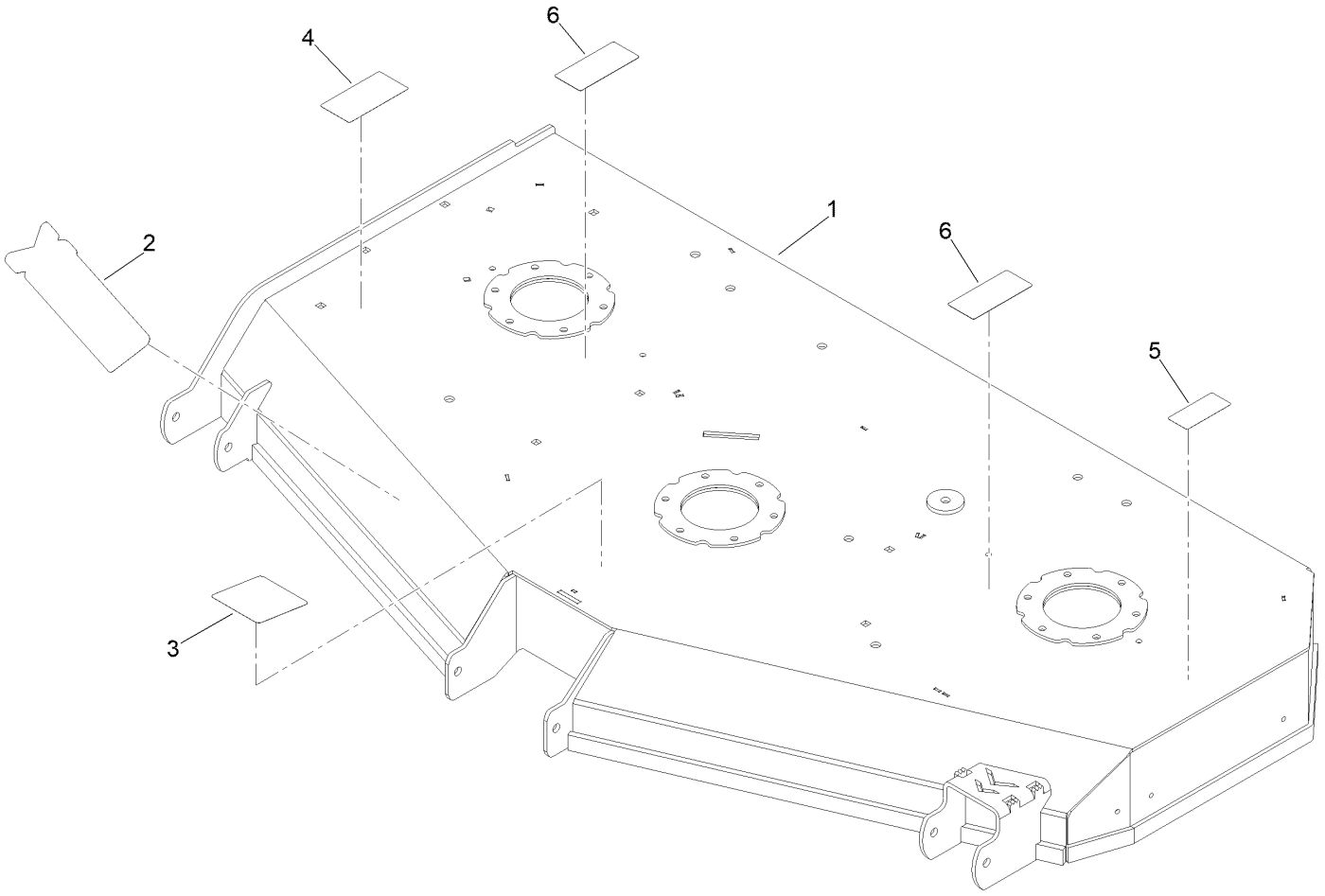

Deck Decal Assembly No. 148-0787 (continued)

Ref.	Part Number	Qty.	Description
1		1	Deck ASM-61 Painted ●
2	148-0848	1	Decal-Deck, 61-Xft
3	148-0260	1	Decal-Deck Belt Routing
4	132-0872	1	Decal-Danger, Deck
5	148-0430	1	Decal-Safety Blade Torque
6	125-6127	2	Decal-Rotating Fan Hazard

● Not serviced separately

Seat Suspension Assembly

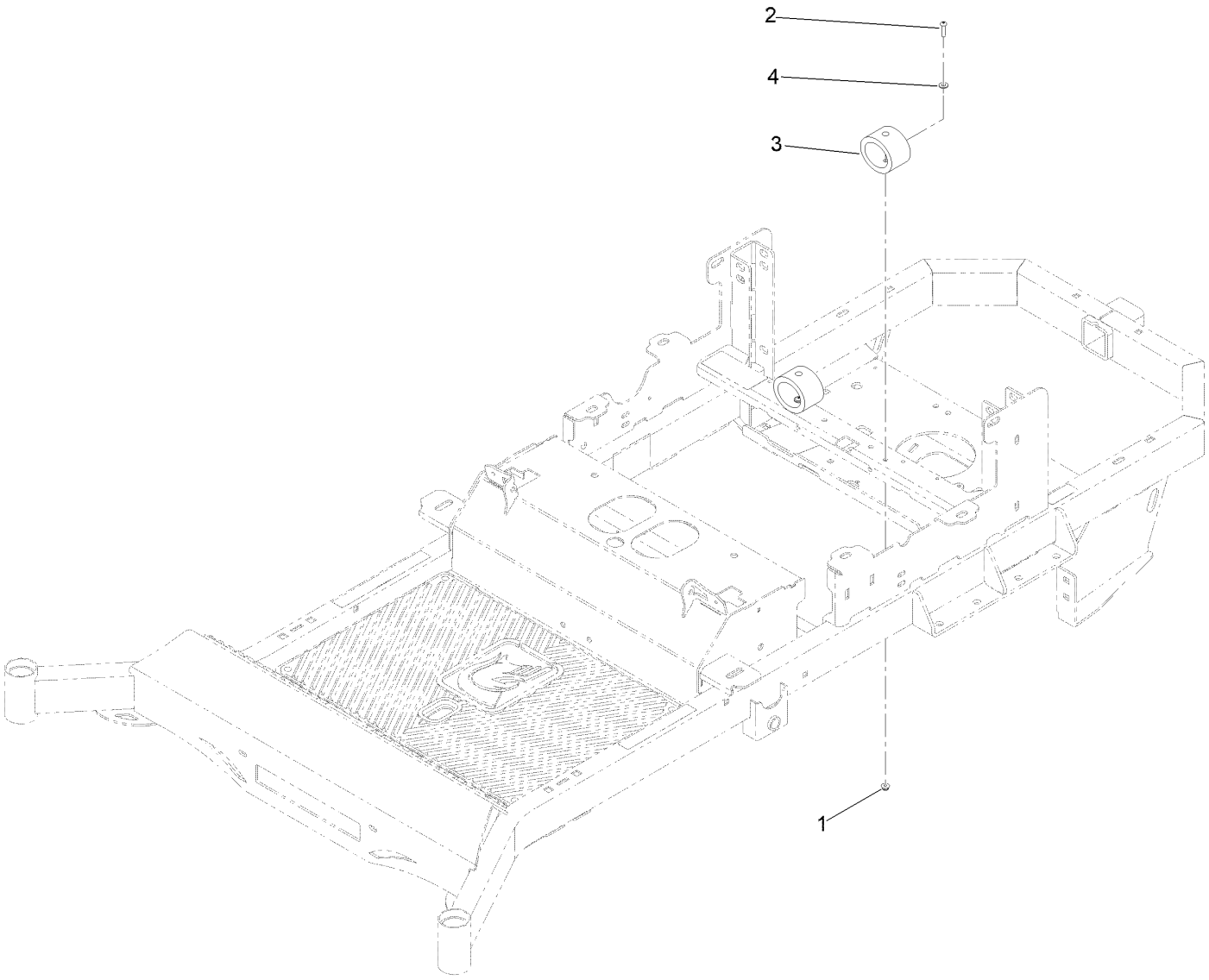

Seat Suspension Assembly (continued)

Ref.	Part Number	Qty.	Description
1	104-7201	2	Nut-HF, NI
2	418-0039-00	2	1/4-20 X 1 Button Socket C/S 18-8 SS
3	487-0004-00	2	Seat Rr Susp Elastomer
4	515-0038	2	Washer-Flat

Notes:

Notes:


SPARTAN